FUJITSU

HIGH STATIC PRESSURE DUCT TYPE SPLIT AIR CONDITIONER

TECHNICAL MANUAL

FUJITSU GENERAL LIMITED

Все каталоги и инструкции здесь: http://splitoff.ru/tehn-doc.html

CONTENTS

1. FEATURE..... 1

2. OUTLINE AND DIMENSIONS..... 3
2.1 INDOOR UNIT..... 3
2.2 OUTDOOR UNIT..... 4
2.3 OPTIONAL PARTS..... 4

3. DATA..... 5
3.1 PERFORMANCE CURVE..... 5
3.2 COOLING SENSIBLE CAPACITY..... 6
3.3 FAN CURVE..... 7
3.4 CAPACITY BY AIR FLOW..... 7
3.5 OUTLET AIR TEMPERATURE..... 7
3.6 TEMPERATURE RANGE..... 8
3.7 ADDITIONAL REFRIGERANT CHARGING..... 8

4. SPECIFICATIONS..... 9

Все каталоги и инструкции здесь: http://splitoff.ru/tehn-doc.html

1.FEATURES

■ DUCT SPLIT TYPE FEATURES

- Installed behind the ceiling this design offers space savings and low noise.
- One external unit is possible of conditioning the air of multiple rooms.
- With a beautiful finish, the outlet grille does not stick out into the room.

■ PRODUCT FEATURES

● High static pressure

Recommended external static pressure is 196 Pa (Max. 300Pa)

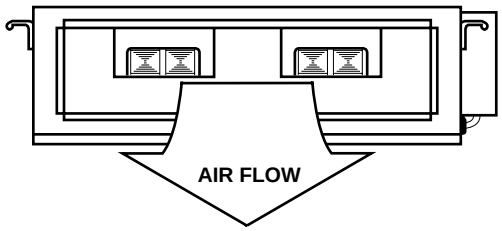

● Easy maintenance

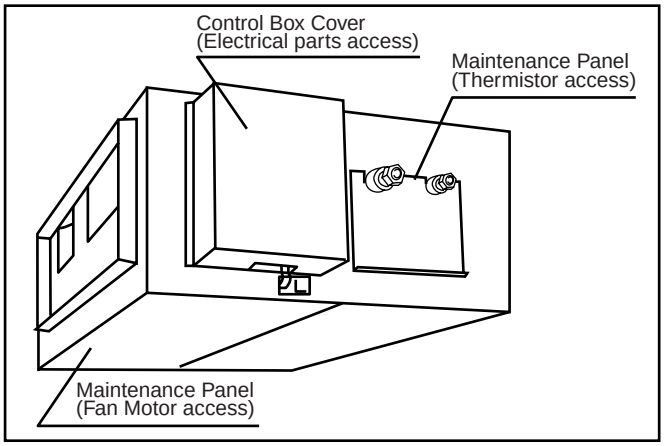

● Highly functional LCD wired remote controller (Refer to the next page for details.)

- Two remote controls for operation in different rooms
- Auto restart function in case of power outage
- Repeat timer can turn the unit on/off every day at the same time.
- Zone control is capable of simultaneously controlling only designated air conditioners to stop.
- Energy save operation

  The energy conservation mode (ENERGY SAVE) raises the set temperature slightly in the cooling mode and lowers the set temperature in the heating mode, using a computer program to economically control the operation of the unit. If you press the ENERGY SAVE button while the air conditioner is on, it will change to the conservation mode. If you press the ENERGY SAVE button while the unit in the timer mode (ON timer, PROGRAM timer or REPEAT timer), the unit will go into the conservation mode when the unit starts with the timer.

● Low external air temperature cooling

- Cooling and heating operations capable with external air temperature down to 0˚C

● Tropical specifications

- Cooling operation capable with external air temperature up to 52˚C

● Pipe length up to 50m with height differential of up to 30m

Все каталоги и инструкции здесь: http://splitoff.ru/tehn-doc.html

■ LIQUID CRYSTAL REMOTE CONTROLLER

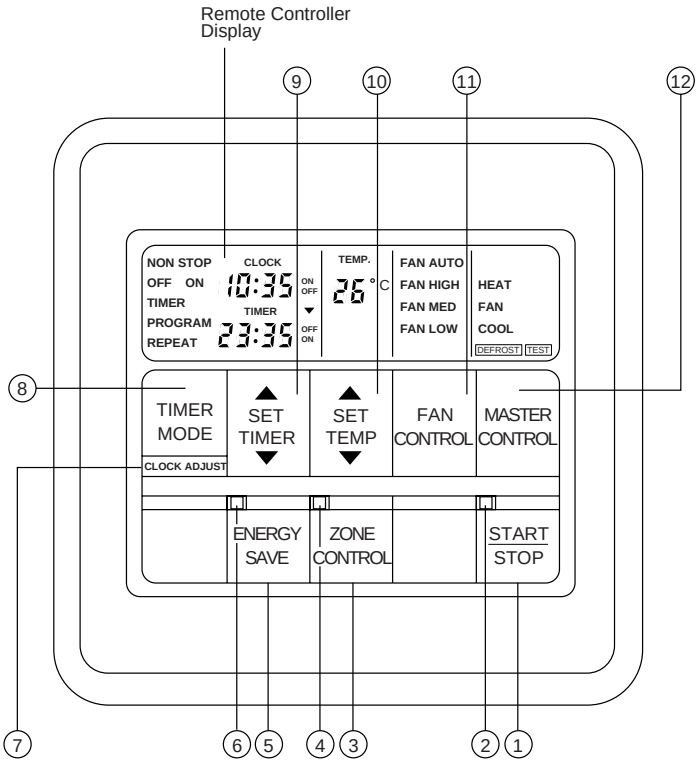

For explanatory purposes, the figure showing the remote controller display shows all possible displays. The actual display shows only that area that is being adjusted or used.

● Remote Controller Display

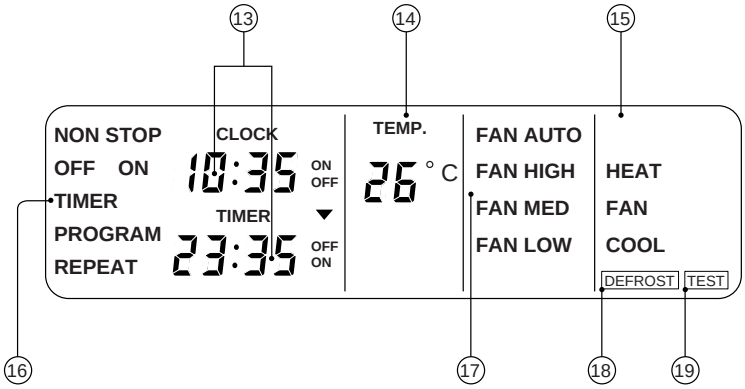

① **START/STOP Button**
Press to start and stop operation.

② **Operation Lamp**
Lights it during and operation and when the timer is on.

③ **ZONE CONTROL Button**
Use to turn the zone control on and off.

④ **ZONE CONTROL Lamp**
Lights up when the unit is in the zone control mode.

⑤ **ENERGY SAVE Button**
Turns the energy efficient mode on and off.

⑥ **ENERGY SAVE Lamp**
Lights up when the unit is in the energy save mode.

⑦ **CLOCK ADJUST Button**

⑧ **TIMER MODE Button**
Use to change timer modes (NON STOP, OFF TIMER, ON TIMER, PROGRAM TIMER, REPEAT TIMER).

⑨ **SET TIME Button (▲/▼)**
Use to change the timer settings and to set the current time.

⑩ **SET TEMP. Button (▲/▼)**
Use to change the temperature setting.

⑪ **FAN CONTROL Button**
Use to select the fan speed (AUTO, HIGH, MED, LOW).

⑫ **MASTER CONTROL Button**
Use to select the various operating modes (HEAT, FAN, COOL).

⑬ **Clock Display (CLOCK/TIMER)**

⑭ **Set Temperature Display (TEMP.)**

⑮ **Operation Mode Display**

⑯ **Timer Mode Display**

⑰ **Fan Speed Display**

⑱ **DEFROST Display**

⑲ **TEST Display**

Depending on the usage circumstances of the unit (room width, outdoor temperature etc.), the displayed temperature may differ from the actual room temperature.

Все каталоги и инструкции здесь: http://splitoff.ru/tehn-doc.html

2.OUTLINE AND DIMENSIONS

2.1 INDOOR UNIT

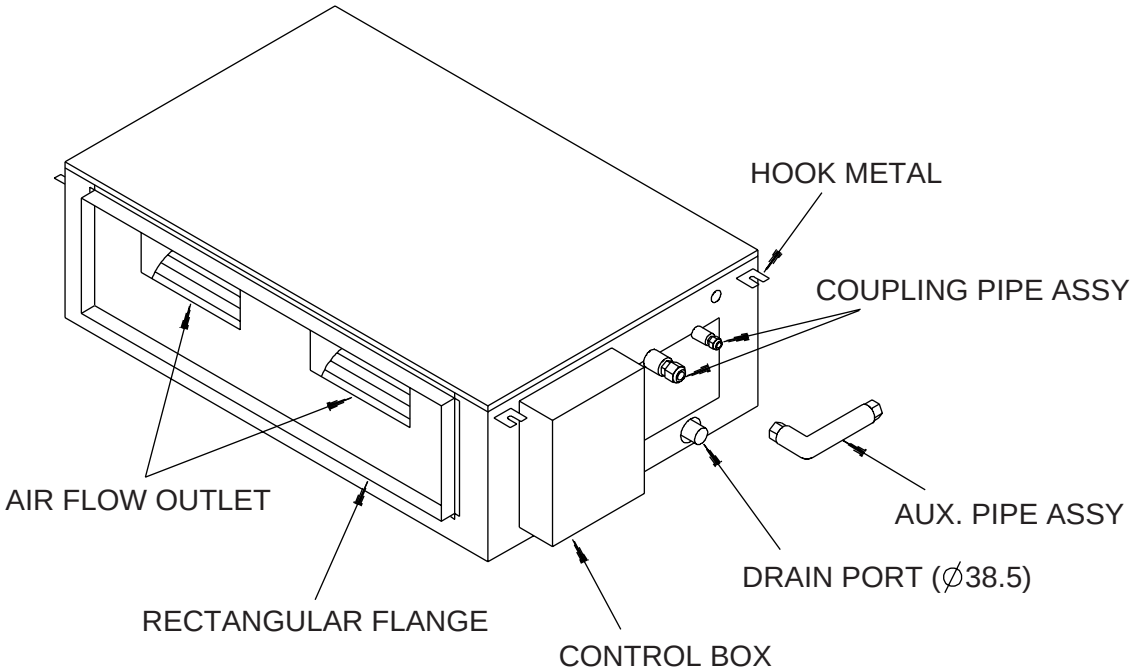

Unit : mm

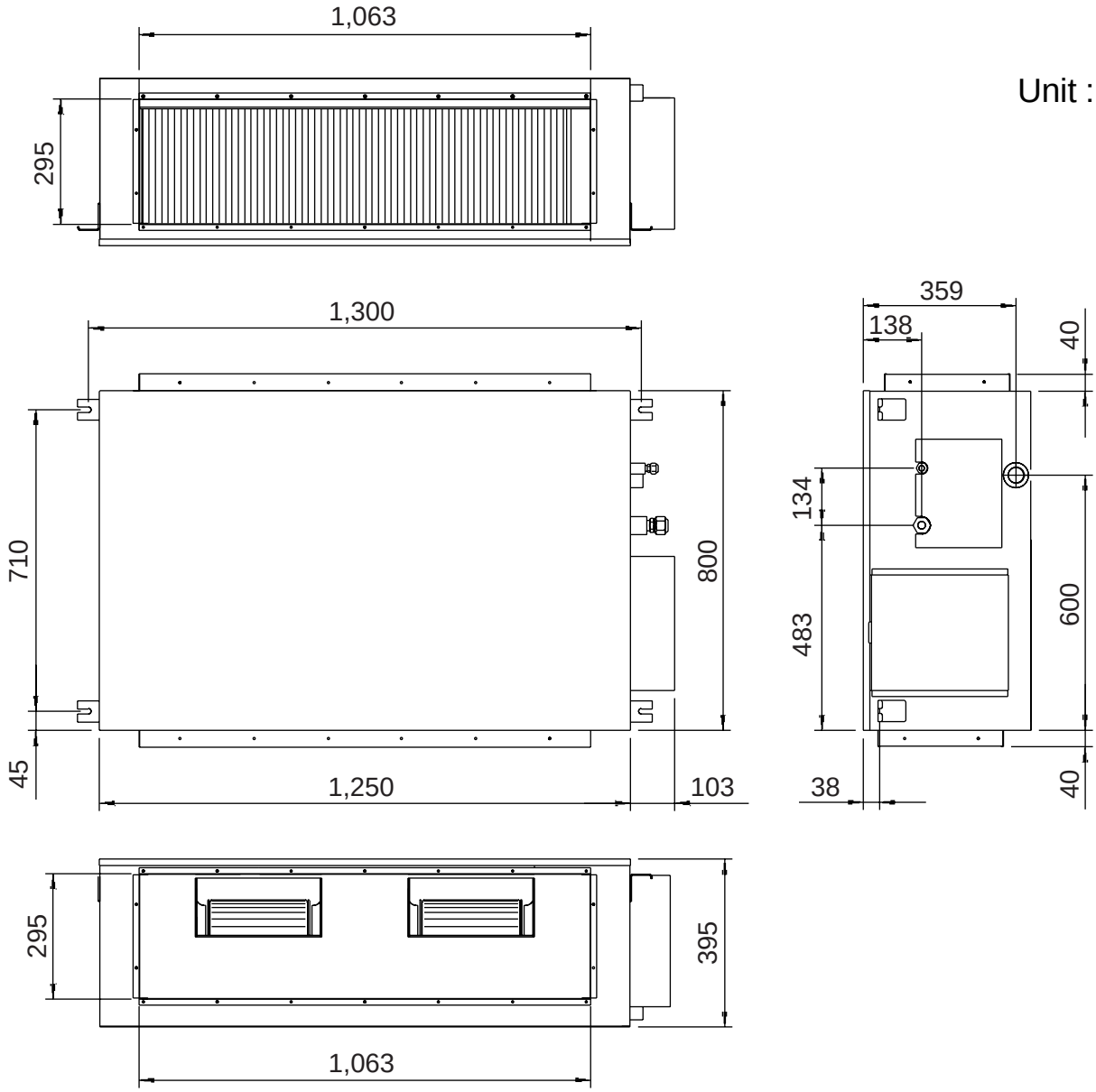

Все каталоги и инструкции здесь: http://splitoff.ru/tehn-doc.html

2.2 OUTDOOR UNIT

Unit : mm

Model : AR60

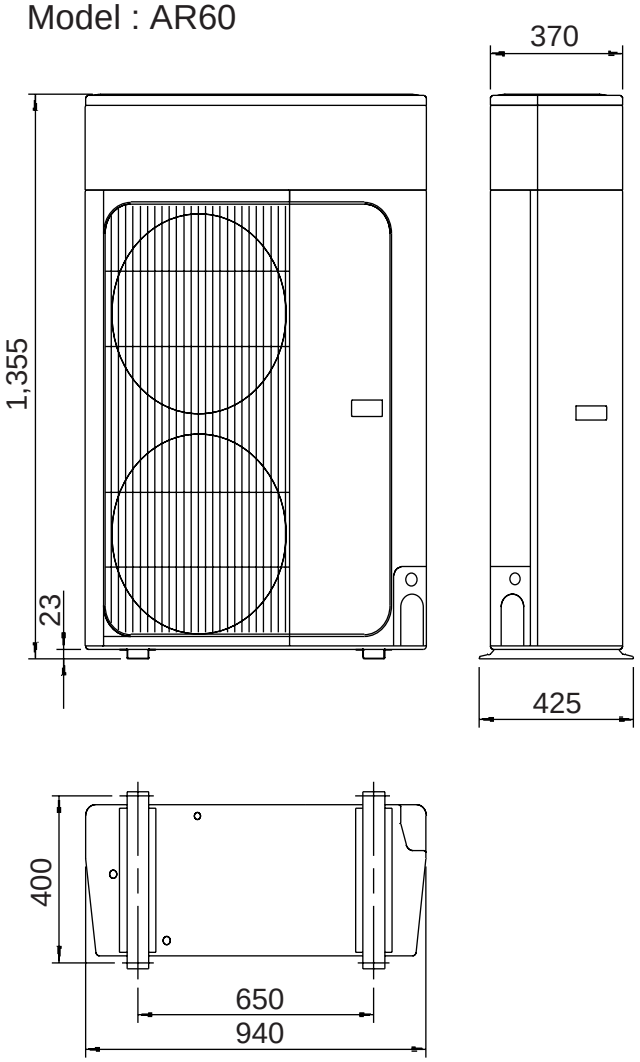

Model : AR45 / AR36

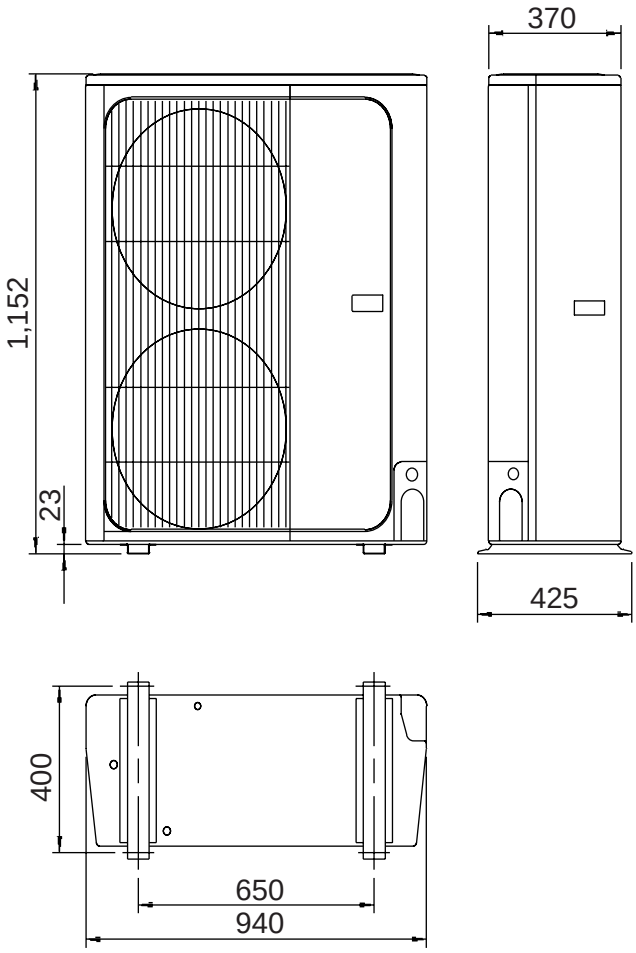

2.3 OPTIONAL PARTS

Unit : mm

● FLEXIBLE ROUND DUCT

Model : UTD-RD202

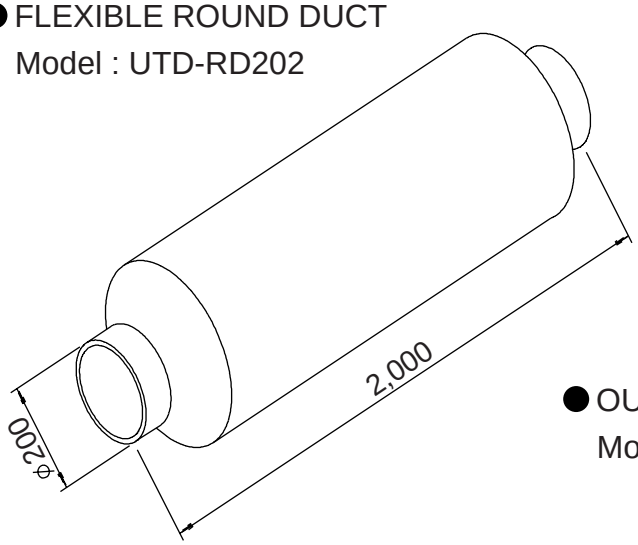

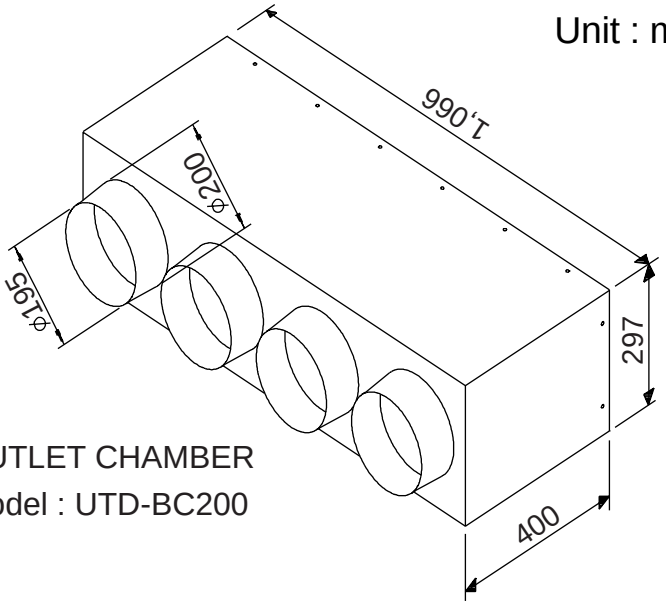

● OUTLET CHAMBER

Model : UTD-BC200

Все каталоги и инструкции здесь: http://splitoff.ru/tehn-doc.html

3. DATA

3.1 PERFORMANCE CURVE

AR60A
AR45AH
AR36AH

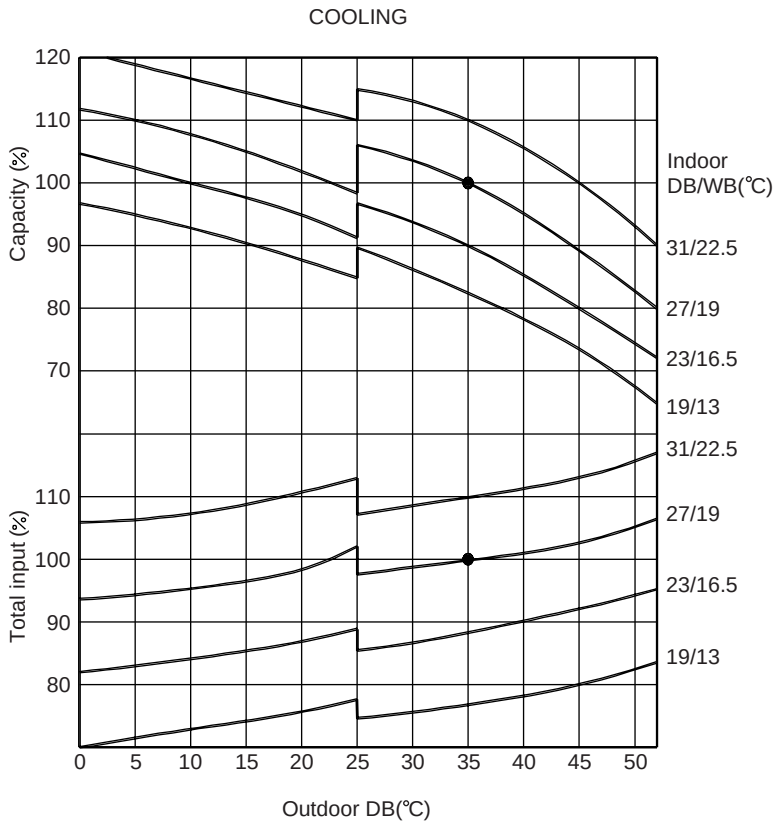

AR60R
AR45RH
AR36RH

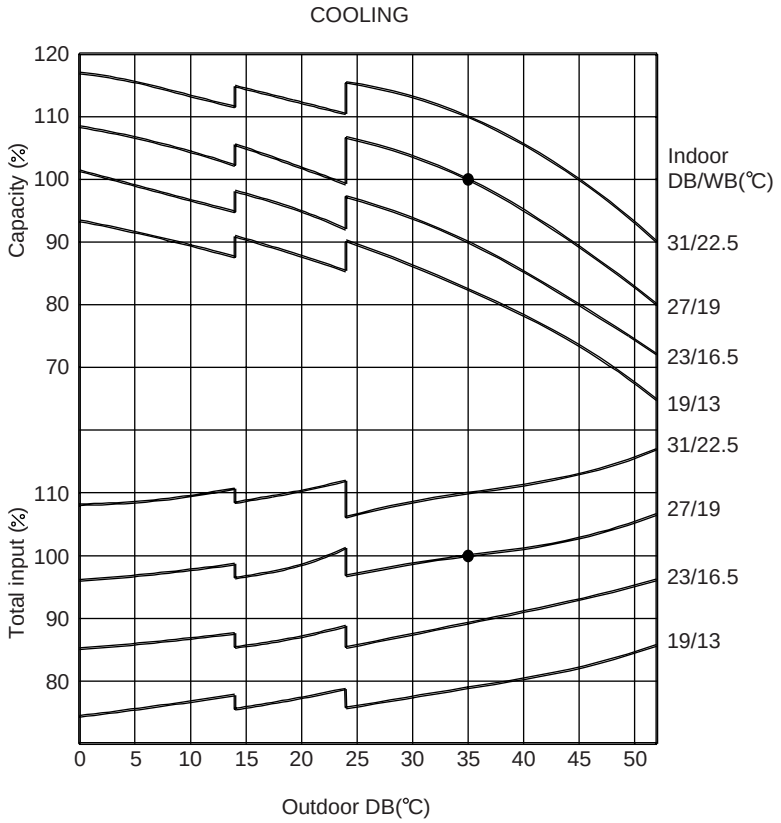

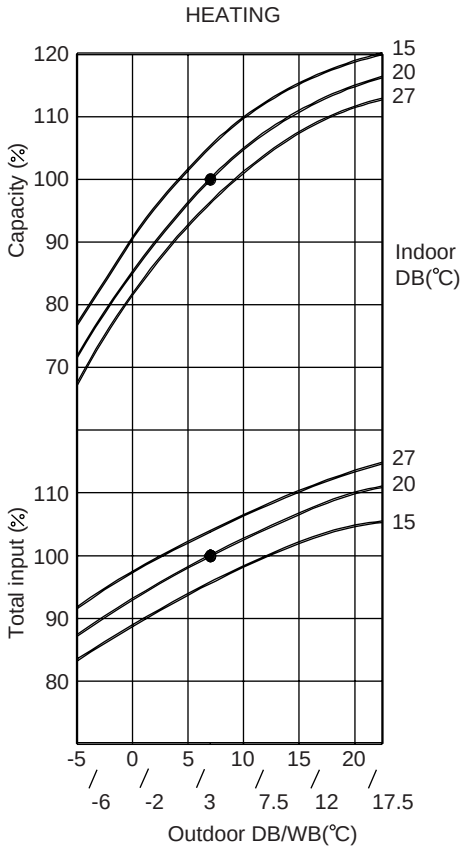

Все каталоги и инструкции здесь: http://splitoff.ru/tehn-doc.html

3.2 COOLING SENSIBLE CAPACITY

AR60A / AR60R

(Unit : kW)

INDOOR TEMP. [℃]		OUTDOOR TEMP. [℃]									
		25		30		35		40		45	
DB	WB	Total	Sens.	Total	Sens.	Total	Sens.	Total	Sens.	Total	Sens.
19	13	15.3	11.6	14.6	11.3	14.0	11.0	13.3	10.6	12.4	10.0
23	16.5	16.5	12.0	15.8	11.7	15.3	11.4	14.5	11.0	13.6	10.5
27	19	18.1	14.3	17.5	14.1	17.0	14.0	16.2	13.5	15.2	13.0
31	22.5	19.6	16.6	19.2	16.5	18.7	16.4	17.9	16.1	17.0	15.6

AR45AH / AR45RH

(Unit : kW)

INDOOR TEMP. [℃]		OUTDOOR TEMP. [℃]									
		25		30		35		40		45	
DB	WB	Total	Sens.	Total	Sens.	Total	Sens.	Total	Sens.	Total	Sens.
19	13	11.4	8.6	10.9	8.4	10.4	8.2	9.9	7.9	9.2	7.4
23	16.5	12.3	8.9	11.8	8.7	11.4	8.5	10.9	8.3	10.2	7.9
27	19	13.5	10.7	13.2	10.6	12.7	10.3	12.1	10.1	11.3	9.7
31	22.5	14.6	12.4	14.4	12.3	14.0	12.2	13.4	12.0	12.7	11.7

AR36AH / AR36RH

(Unit : kW)

INDOOR TEMP. [℃]		OUTDOOR TEMP. [℃]									
		25		30		35		40		45	
DB	WB	Total	Sens.	Total	Sens.	Total	Sens.	Total	Sens.	Total	Sens.
19	13	9.5	7.2	9.1	7.0	8.6	6.8	8.2	6.5	7.7	6.2
23	16.5	10.2	7.4	9.9	7.3	9.5	7.1	9.0	6.8	8.4	6.5
27	19	11.2	8.8	10.8	8.7	10.5	8.5	10.0	8.3	9.4	8.0
31	22.5	12.1	10.3	11.9	10.2	11.6	10.1	11.2	10.0	10.5	9.6

Все каталоги и инструкции здесь: http://splitoff.ru/tehn-doc.html

3.3 FAN CURVE

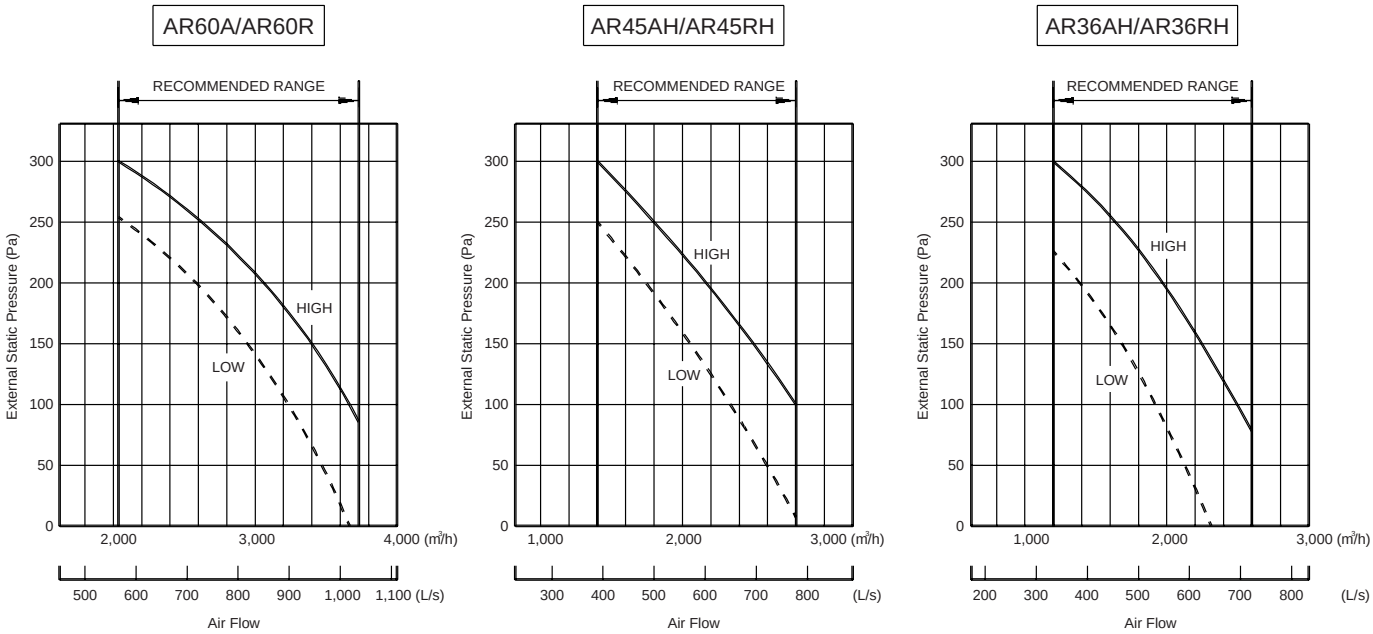

3.4 CAPACITY BY AIR FLOW

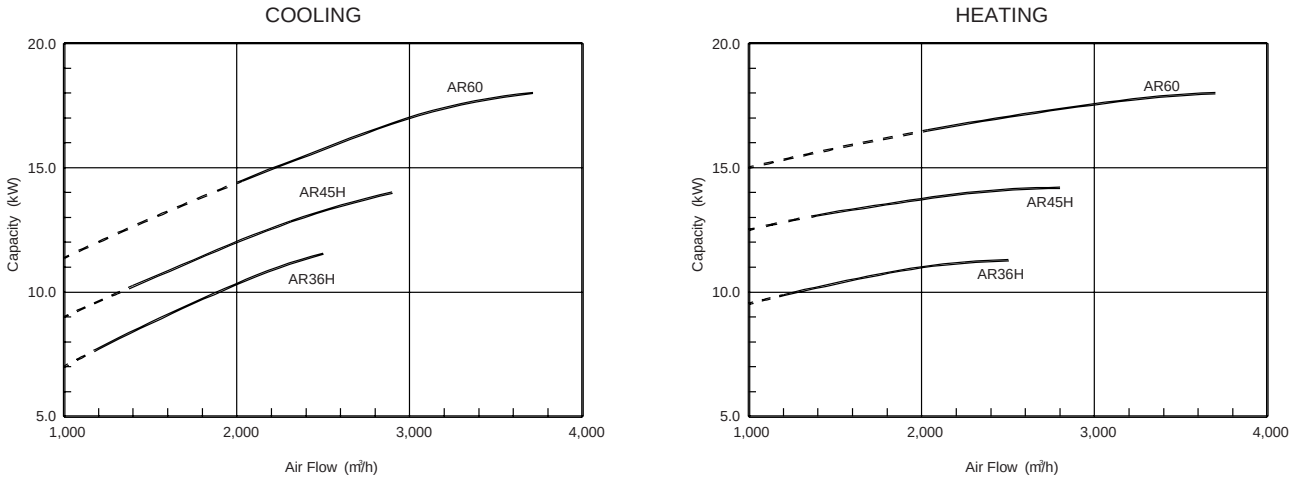

3.5 OUTLET AIR TEMPERATURE

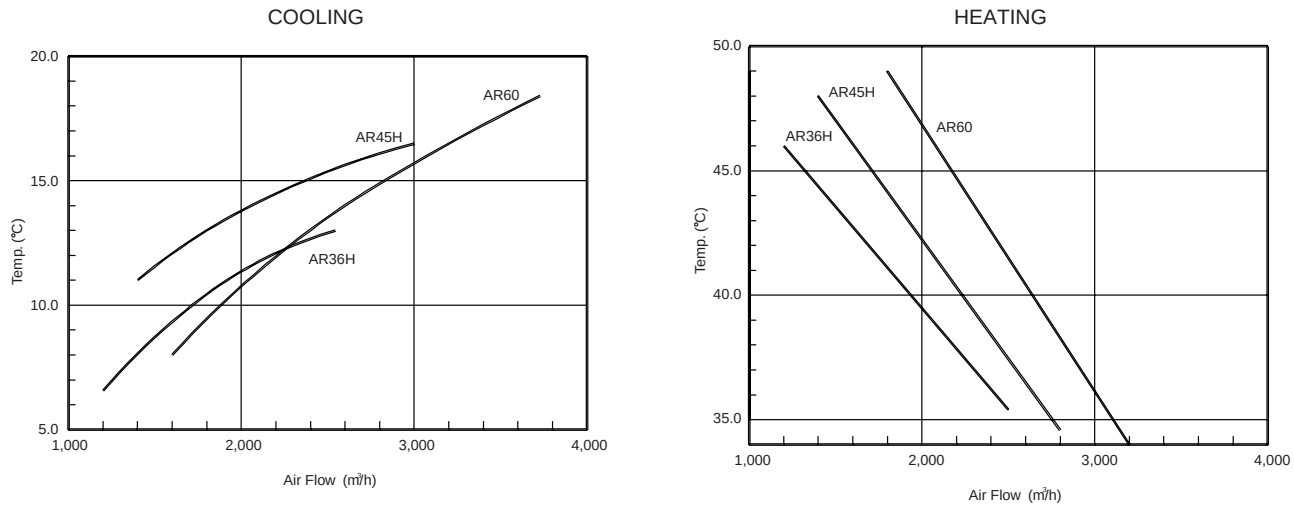

Все каталоги и инструкции здесь: http://splitoff.ru/tehn-doc.html

3.6 TEMPERATURE RANGE

MODEL NAME	OPERATION	TEMPERATURE RANGE	
		INDOOR	OUTDOOR
AR60A/AR60R AR45RH AR36RH	COOLING	About 18 to 32℃	About 0 to 52℃
AR45AH AR36AH			About 0 to 52℃ (AUST. MODEL : About 21 to 52℃)
AR60R	HEATING	About 30℃ or less	About -8 to 21℃
AR45RH AR36RH			About -5 to 21℃

3.7 ADDITIONAL REFRIGERANT CHARGING

		5m	10m	20m	30m	40m	50m	Additional refrigerant g/m(oz/ft)
Full charge amount	AR60A	4,800g			5,400g	6,000g	6,600g	60
		(169.3oz)			(190.5oz)	(211.6oz)	(232.8oz)	(2.12)
	AR60R	4,800g			5,400g	6,000g	6,600g	60
		(169.3oz)			(190.5oz)	(211.6oz)	(232.8oz)	(2.12)
	AR45AH	3,150g	3,325g	3,675g	4,025g	4,375g	4,725g	35
		(111.1oz)	(117.3oz)	(129.6oz)	(142.0oz)	(154.3oz)	(166.7oz)	(1.23)
	AR45RH	3,400g	3,600g	4,000g	4,400g	4,800g	5,200g	40
		(119.9oz)	(127.0oz)	(141.1oz)	(155.2oz)	(169.3oz)	(183.4oz)	(1.41)
	AR36AH	2,150g	2,325g	2,675g	3,025g	3,375g	3,725g	35
		(75.8oz)	(82.0oz)	(94.4oz)	(106.7oz)	(119.0oz)	(131.4oz)	(1.23)
	AR36RH	3,400g	3,600g	4,000g	4,400g	4,800g	5,200g	40
		(119.9oz)	(127.0oz)	(141.1oz)	(155.2oz)	(169.3oz)	(183.4oz)	(1.41)

Все каталоги и инструкции здесь: http://splitoff.ru/tehn-doc.html

4. SPECIFICATIONS

Model				AR ☐ 60A	AR ☐ 60R	AR ☐ 45AH	AR ☐ 45RH	AR ☐ 36AH	AR ☐ 36RH
	INDOOR UNIT			AO ☐ 60AB	AO ☐ 60RB	AO ☐ 45AC	AO ☐ 45RC	AO ☐ 36AC	AO ☐ 36RC
Power Supply		Ø-Hz		3 - 50	3 - 50	3 - 50	3 - 50	3 - 50	3 - 50
		V		380 - 415	380 - 415	380 - 415	380 - 415	380 - 415	380 - 415
Capacity	Cooling	kW		16.4 - 17.0	16.4 - 17.0	12.4 - 12.7	12.4 - 12.7	10.3 - 10.5	10.3 - 10.5
		BTU/h		56,000 - 58,000	56,000 - 58,000	42,500 - 43,500	42,500 - 43,500	35,200 - 36,000	35,200 - 36,000
	Heating	kW		———	17.0 - 17.6	———	13.4 - 13.7	———	10.5 - 10.7
		BTU/h		———	58,000 - 60,000	———	46,000 - 47,000	———	36,000 - 36,500
Total Input	Cooling	kW		5.80 - 5.90	5.80 - 5.90	4.70 - 4.80	4.95 - 5.05	4.10 - 4.20	4.35 - 4.50
	Heating	kW		———	4.9 - 5.05	———	4.38 - 4.38	———	3.35 - 3.45
Total Current	Cooling	A		9.8 - 9.8	9.8 - 9.8	8.2 - 8.1	8.5 - 8.4	7.1 - 7.0	7.5 - 7.4
	Heating	A		———	8.7 - 8.7	———	7.6 - 7.6	———	6.0 - 6.0
E.E.R.	Cooling	kW/kW		2.83 - 2.88	2.83 - 2.88	2.64 - 2.65	2.51 - 2.51	2.51 - 2.50	2.40 - 2.33
	Heating	kW/kW		———	3.47 - 3.49	———	3.06 - 3.13	———	3.13 - 3.10
Starting Current		A		79	79	55	55	42	42
Indoor Unit	Fan Speed (At 0 Pa)	High	r.p.m.	1,150	1,150	890	890	760	760
		Med		1,075	1,075	820	820	690	690
		Low		1,000	1,000	760	760	630	630
	Air Circulation	High	m^3/h	3,000	3,000	2,200	2,200	2,000	2,000
		Med		2,750	2,750	1,900	1,900	1,700	1,700
		Low		2,500	2,500	1,600	1,600	1,400	1,400
	Noise (SPL)	High	dB	49.0	49.0	48.0	48.0	47.0	47.0
		Med		47.0	47.0	46.0	46.0	45.0	45.0
		Low		45.0	45.0	44.0	44.0	43.0	43.0
	Fan Type x Q'ty			Sirocco x 2	Sirocco x 2	Sirocco x 2	Sirocco x 2	Sirocco x 2	Sirocco x 2
	Fan Motor Output		W	500	500	350	350	350	350
	Dimensions		mm	400 x 1,250 x 800	400 x 1,250 x 800	400 x 1,250 x 800	400 x 1,250 x 800	400 x 1,250 x 800	400 x 1,250 x 800
	Weight Net/Gross		kg	75 / 90	75 / 90	75 / 90	75 / 90	75 / 90	75 / 90
Outdoor Unit	Fan Speed		r.p.m.	820	820	790	790	790	790
	Air Circulation		m^3/h	5,800	5,800	5,900	5,900	5,900	5,900
	Noise (SPL)		dB	62.5	62.5	59.0	59.0	59.0	59.0
	Fan Type x Q'ty			Propeller x 2	Propeller x 2	Propeller x 2	Propeller x 2	Propeller x 2	Propeller x 2
	Fan Motor Output		W	63	63	63	63	63	63
	Compressor Type			Recipro	Recipro	Recipro	Recipro	Recipro	Recipro
	Motor Output		kW	5.39	5.39	3.70	3.70	3.00	3.00
	Protection			Internal Overload Relay	Internal Overload Relay	Internal Overload Relay	Internal Overload Relay	Internal Overload Relay	Internal Overload Relay
	Dimensions		mm	1,355 x 940 x 370	1,355 x 940 x 370	1,152 x 940 x 370	1,152 x 940 x 370	1,152 x 940 x 370	1,152 x 940 x 370
	Weight Net/Gross		kg	121 / 136	129 / 144	102 / 116	108 / 122	94 / 108	96 / 110
Refrigerant Charge			kg	4.80	4.80	3.15	3.40	2.15	3.40
Pipe Size			mm	⌀9.53, ⌀19.05	⌀9.53, ⌀19.05	⌀9.53, ⌀19.05	⌀9.53, ⌀19.05	⌀9.53, ⌀19.05	⌀9.53, ⌀19.05
Connection Method				Flare	Flare	Flare	Flare	Flare	Flare
Pipe Length/Height			m	50 / 30	50 / 30	50 / 30	50 / 30	50 / 30	50 / 30
Remote Controller (Cable Length)				LCD (10 m)	LCD (10 m)	LCD (10 m)	LCD (10 m)	LCD (10 m)	LCD (10 m)
Static Pressure			Pa	196 (Max. 294)	196 (Max. 294)	196 (Max. 294)	196 (Max. 294)	196 (Max. 294)	196 (Max. 294)
Rated Condition		Cooling In, Out		27/19, 35/24	27/19, 35/24	27/19, 35/24	27/19, 35/24	27/19, 35/24	27/19, 35/24
		Heating In, Out		———	20/15.5, 7/6	———	20/15.5, 7/6	———	20/15.5, 7/6

- Specifications and design are subject to change without notice for further improvement. Please check with your dealer.
- Recomended external static pressure is 196 Pa.
- In the adove square, put the T or Y by a destination.

Все каталоги и инструкции здесь: http://splitoff.ru/tehn-doc.html

FUJITSU GENERAL LIMITED

1116, Suenaga, Takatsu-ku, Kawasaki 213-8502, Japan

Большая библиотека технической документации
http://splitoff.ru/tehn-doc.html
каталоги, инструкции, сервисные мануалы, схемы.